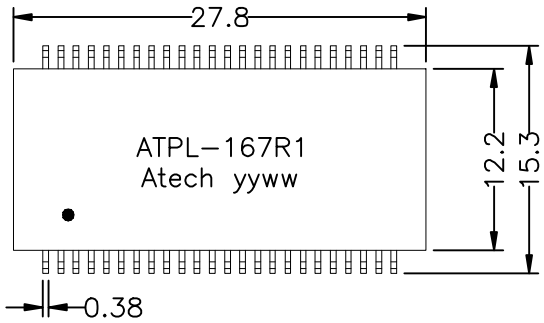

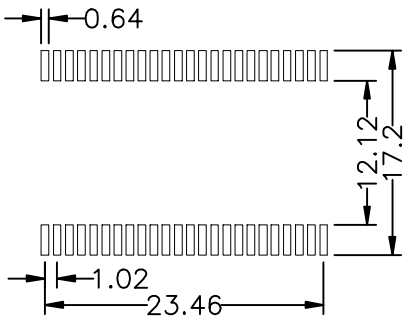

SUGGESTED PCB LAYOUT

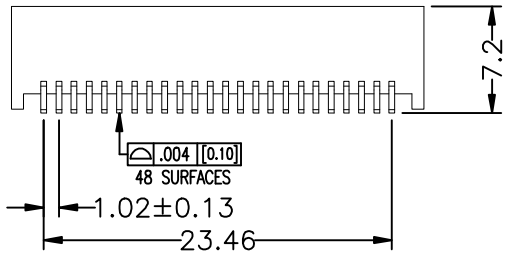

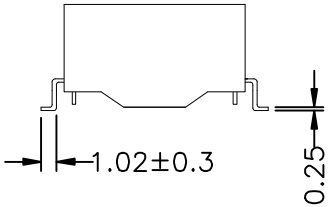

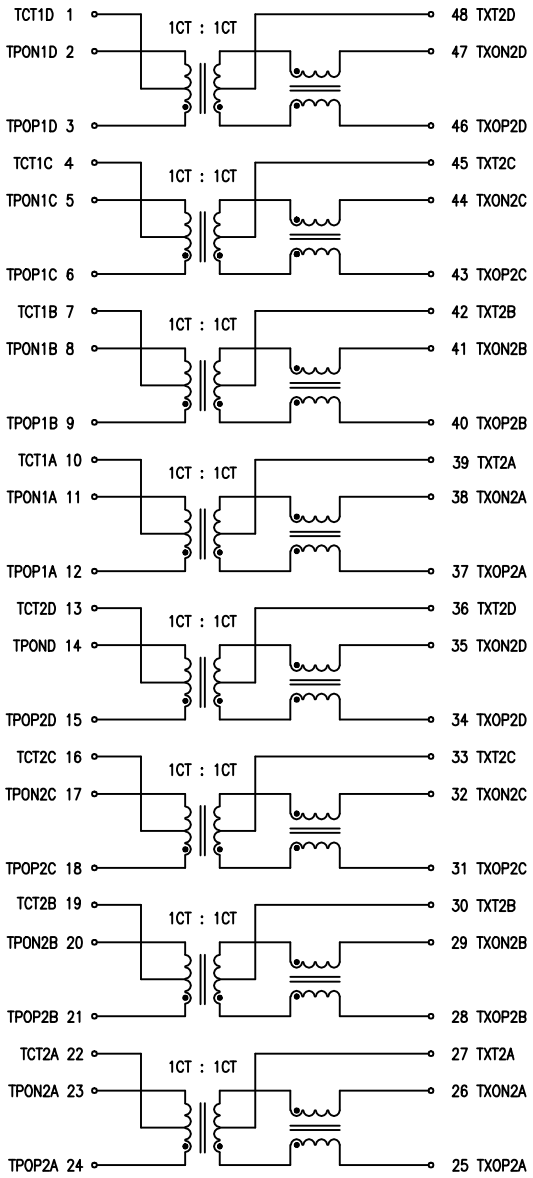

UNLESS OTHERWISE SPECIFIED ALL TOLERANCES ARE XX.XX±0.25 0.XX±0.05

* RoHS COMPLIANT

ELECTRICAL CHARACTERISTICS @25°C:

1. TURNS RATIO : TX/RX = 1CT : 1CT
2. PRI OCL (@100kHz/0.1V With 8mA DC Bias) : 350uH MIN.
3. INSERTION LOSS : 1-100MHz = -1.1dB MAX.
4. RETURN LOSS (@100Ω) : 1-30MHz = -18dB MIN.
   40MHz = -14.4dB MIN.
   50MHz = -13.1dB MIN.
   60-80MHz = -12dB MIN.
5. DCMR : 1-100MHz = -30dB MIN.
6. CROSS TALK : 1-100MHz = -30dB MIN.
7. LK(@100KHz, 0.1Vrms) : 0.5uH MAX.
8. DCR : 1.2Ω MAX.
9. HI-POT : 1500Vrms, 1mA, 60SEC
10. OPERATING TEMPERATURE RANGE : -40°C~+85°C

NO:	DESCRIPTION	DATE	BY	CHK	APPD
	RELEASE	10/02/2018	SHIRLEY	BETTY	BETTY

REVISIONS

AOEM.

TITLE 10/100 BASE-TX TRANSRORMER			
DWG. NO. ATPL-167R1			
UNITS: M/M	SAFETY	SHEET 1 OF 1	
DATE 2018/10/02	P/N:	DRAW SHIRLEY	